Hard Disk Drives (HDDs)

Jin-Soo Kim (*jinsookim@skku.edu*)
Computer Systems Laboratory
Sungkyunkwan University
http://csl.skku.edu

Three Pieces

- Virtualization
  - Virtual CPUs
  - Virtual memory
- Concurrency
  - Threads
  - Synchronization
- Persistence
  - How to make information persist, despite computer crashes, disk failures, or power outages?
  - Storage
  - File systems

Modern System Architecture

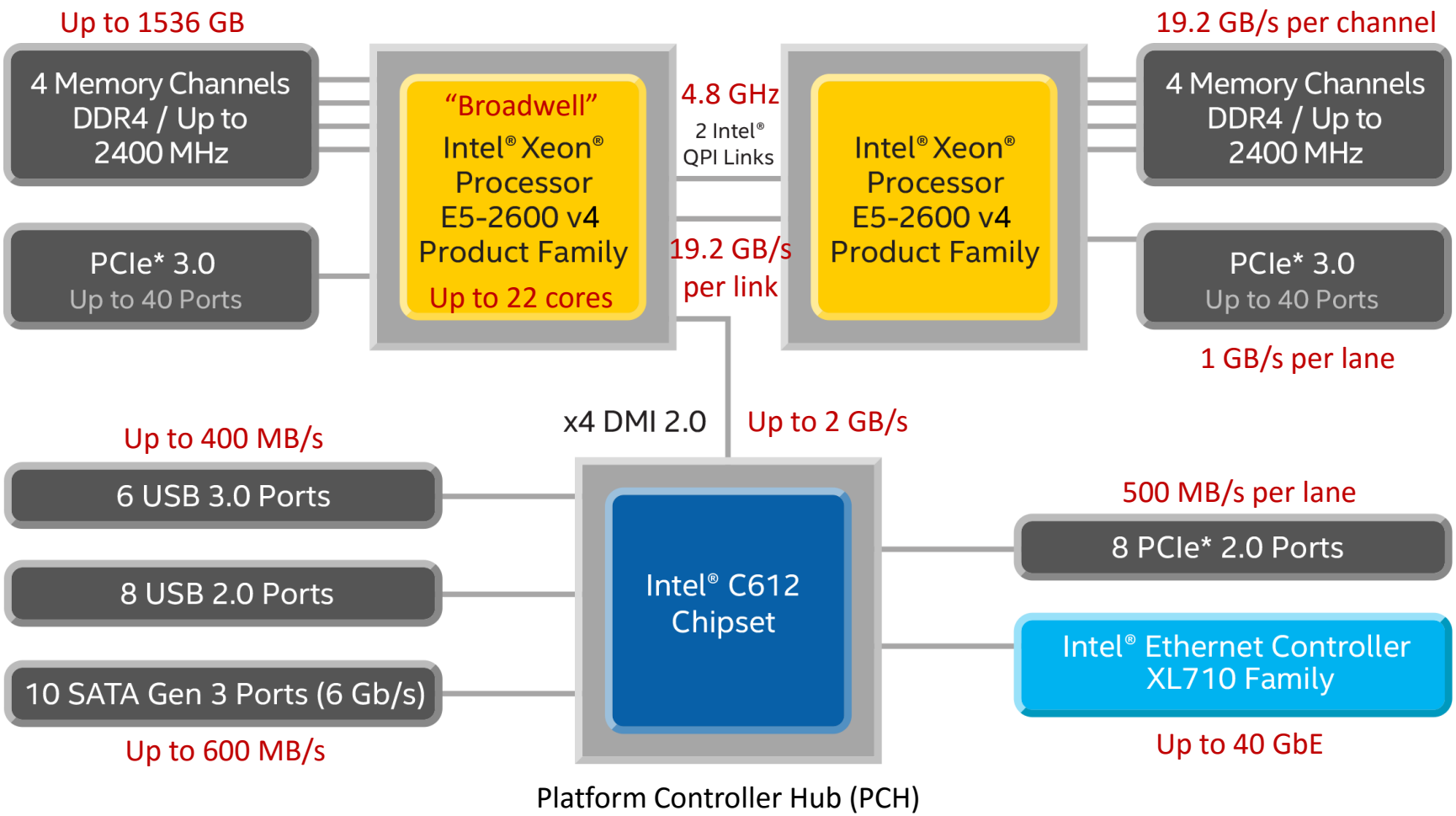

A Typical I/O Device

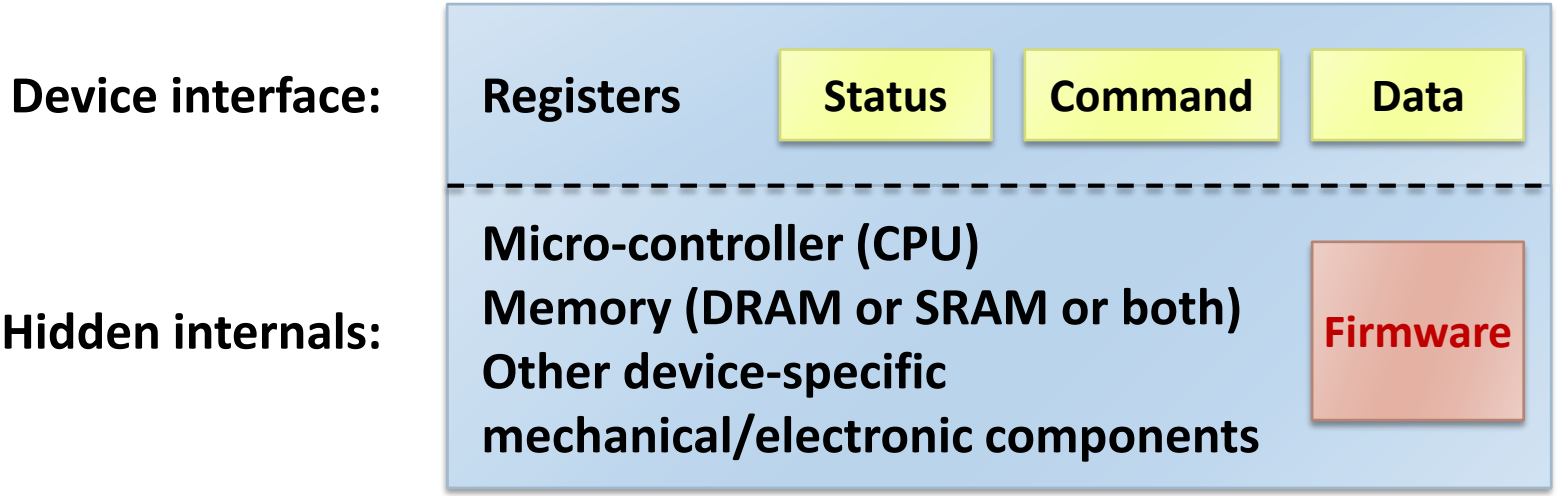

- Control: Special instructions (e.g. `in` & `out` in x86) vs. memory-mapped I/O (e.g. `load` & `store`)
- Data transfer: Programmed I/O (PIO) vs. DMA
- Status check: Polling vs. Interrupts

Classifying I/O Devices

- Block device
  - Stores information in fixed-size blocks, each one with its own address
  - Typically, 512B or 4KB per block
  - Can read or write each block independently
  - Disks, tapes, etc.

- Character device
  - Delivers or accepts a stream of characters
  - Not addressable and no seek operation supported
  - Printers, networks, mouse, keyboard, etc.

I/O Stack

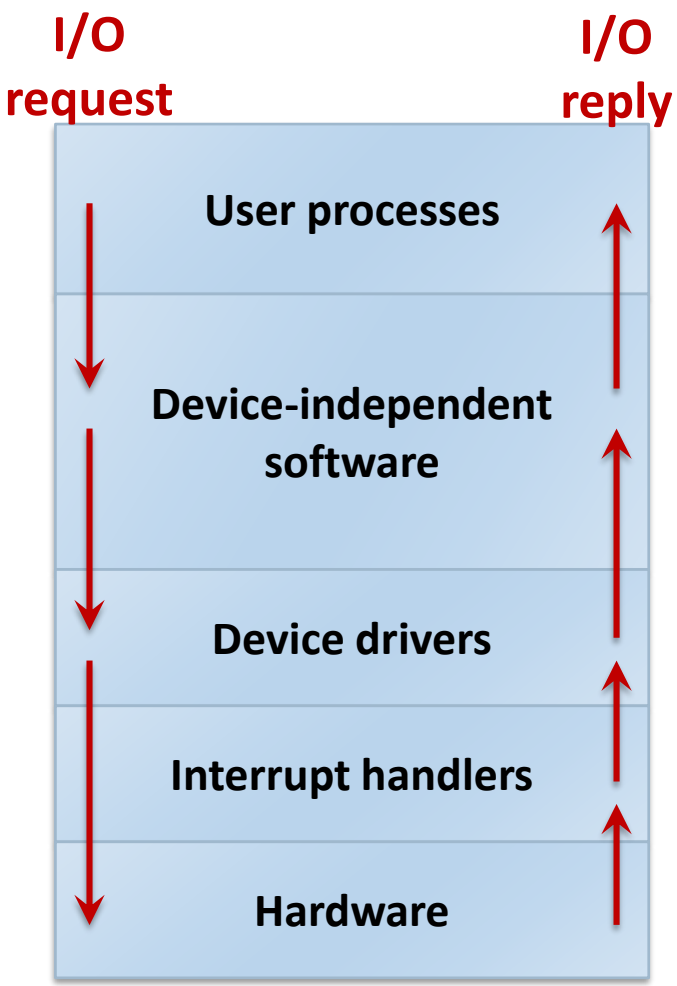

Make I/O call, format I/O, spooling

Naming, protection, blocking, buffering, allocation

Set up device registers, check status

Wake up driver when I/O completed

Perform I/O operation

Device Drivers

- Device-specific code to control each I/O device
  - Require to define a well-defined model and a standard interface
- Implementation
  - Statically linked with the kernel
  - Selectively loaded into the system during boot time
  - Dynamically loaded into the system during execution (especially for hot pluggable devices)
- Variety is a challenge
  - Many, many devices
  - Each has its own protocol

OS Reliability

OS Reliability and Device Drivers

- Reliability remains a crucial, but unresolved problem
  - 5% of Windows systems crash every day
  - Huge cost of failures: stock exchange, e-commerce, etc.
  - Growing "unmanaged systems": digital appliances, CE devices
- OS extensions are increasingly prevalent
  - 70% of Linux kernel code
  - Over 35,000 drivers with over 120,000 versions on WinXP
  - Written by less experienced programmer
- Extensions are a leading cause of OS failure
  - Drivers cause 85% of WinXP crashes
  - Drivers are 7 times buggier than the kernel in Linux

Secondary Storage

- Anything that is outside of "primary memory"
  - Does not permit direct execution of instructions or data retrieval via machine load/instructions
  - Abstracted as an array of sectors
  - Each sector is typically 512 bytes or 4096 bytes

- HDD (Hard Disk Drive) Characteristics
  - It's large: 100 GB or more
  - It's cheap: 3TB SATA3 hard disk costs 100,000won
  - It's persistent: data survives power loss
  - It's slow: milliseconds to access

HDD Architecture

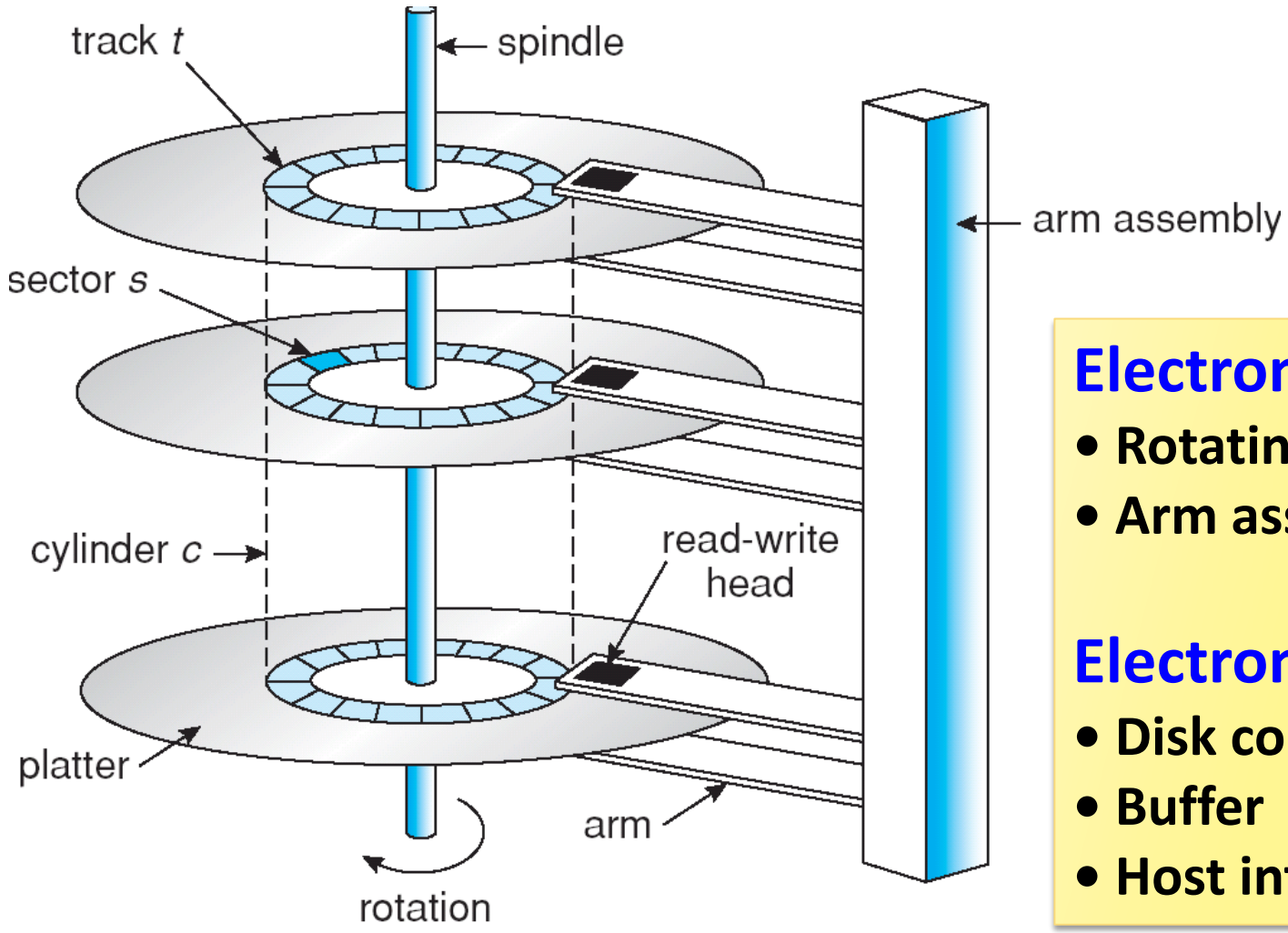

Electromechanical

- **Rotating disks**
- **Arm assembly**

Electronics

- **Disk controller**
- **Buffer**
- **Host interface**

A Modern HDD

- Seagate Barracuda ST5000DM000 (5TB)
  - 8 Heads, 4 Discs
  - 63 sectors/track, 16,383 cylinders
  - Avg. track density: 455K TPI (tracks/inch)
  - Avg. areal density: 826 Gbits/sq.inch
  - Spindle speed: 7200 rpm (8.3 ms/rotation)
  - Internal cache buffer: 128 MB
  - Average seek time: < 12.0 ms
  - Max. I/O data transfer rate: 600 MB/s (SATA3)
  - Max. sustained data transfer rate: 160 MB/s
  - Max power-on to ready: < 22.0 sec

HDD Internals

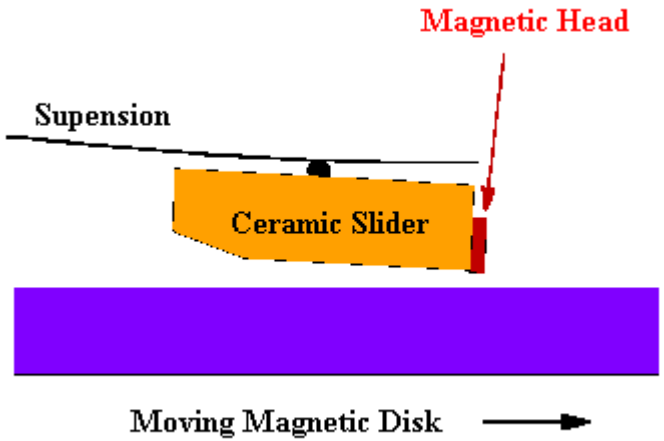

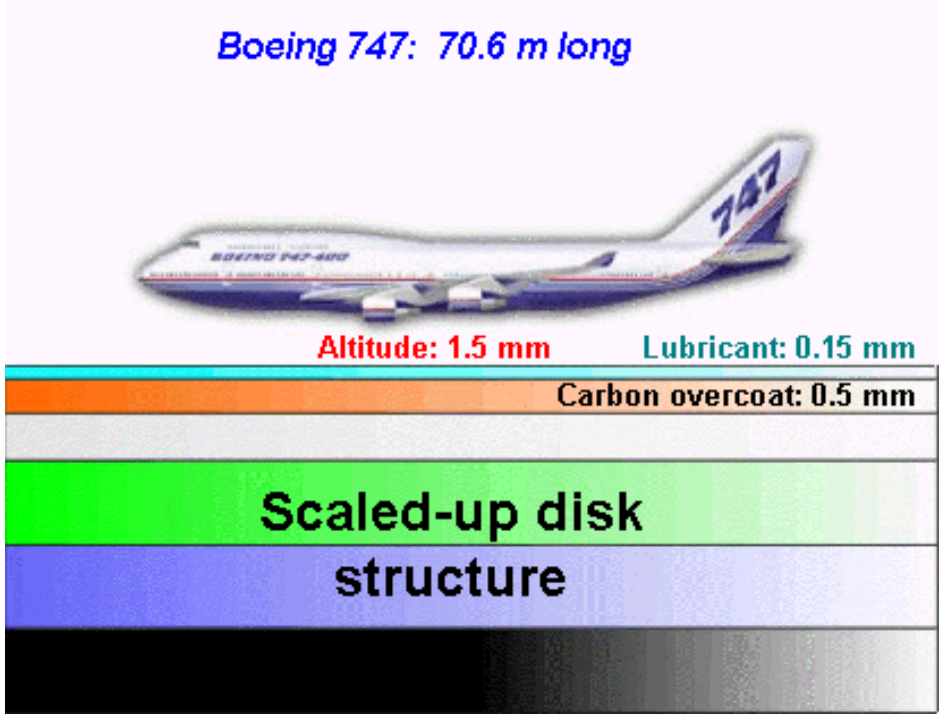

- Our Boeing 747 will fly at the altitude of only a few mm at the speed of approximately 65mph periodically landing and taking off
- And still the surface of the runway, which consists of a few mm-think layers, will stay intact for years

Interfacing with HDDs

- Cylinder-Head-Sector (CHS) scheme
  - Each block is addressed by <Cylinder #, Head #, Sector #>
  - The OS needs to know all disk "geometry" parameters
- Logical block addressing (LBA) scheme
  - First introduced in SCSI
  - Disk is abstracted as a logical array of blocks [0, …, N-1]
  - Address a block with a "logical block address (LBA)"
  - Disk maps an LBA to its physical location
  - Physical parameters of a disk are hidden from OS

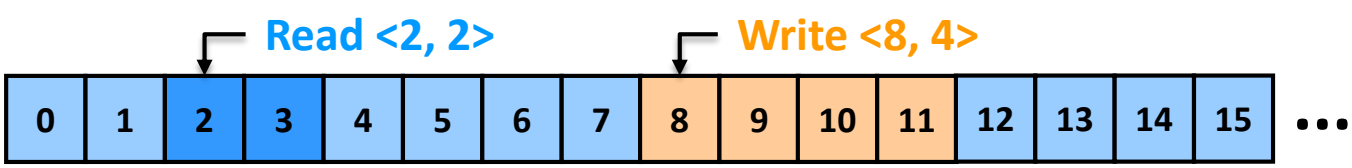

HDD Performance Factors

- Seek time (T_{seek})
  - Moving the disk arm to the correct cylinder
  - Depends on the cylinder distance (not purely linear cost)
  - Average seek time is roughly one-third of the full seek time
- Rotational delay ($T_{rotation}$)
  - Waiting for the sector to rotate under head
  - Depends on rotations per minute (RPM)
  - 5400, 7200 RPM is common, 10K or 15K RPM for servers
- Transfer time ($T_{transfer}$)
  - Transferring data from surface into disk controller, sending it back to the host

HDD Performance Comparison

	Cheetah 15K.5	Barracuda
Capacity	**300 GB**	**1 TB**
RPM	**15,000**	**7,200**
Avg. Seek	**4 ms**	**9 ms**
Max Transfer	**125 MB/s**	**105 MB/s**
Platters	**4**	**4**
Cache	**16MB**	**16/32 MB**
Interface	**SCSI**	**SATA**
Random Read (4 KB)	T_{seek} = 4ms $T_{rotation}$ = 60 / 15000 / 2 = 2ms $T_{transfer}$ = 4KB / 125MB = 32µs $R_{I/O}$ ≈ 4KB / 6ms = 0.66 MB/s	T_{seek} = 9ms, $T_{rotation}$ = 60 / 7200 / 2 = 4.2ms $T_{transfer}$ = 4KB / 105MB = 37µs $R_{I/O}$ ≈ 4KB / 13.2ms = 0.31 MB/s
Sequential Read (100 MB)	$T_{transfer}$ = 100MB / 125MB = 0.8s $R_{I/O}$ ≈ 100MB / 0.8s = 125 MB/s	$T_{transfer}$ = 100MB / 105MB = 0.95s $R_{I/O}$ ≈ 100MB / 0.95s = 105 MB/s

Disk Scheduling

- Given a stream of I/O requests, in what order should they be served?
  - Much different than CPU scheduling
  - Seeks are so expensive
  - Position of disk head relative to request position matters more than length of a job
- Work conserving schedulers
  - Always try to do work if there's work to be done
- Non-work-conserving schedulers
  - Sometimes, it's better to wait instead if system anticipates another request will arrive

FCFS

- First-Come First-Served (= do nothing)
  - Reasonable when load is low
  - Long waiting times
    for long request queues

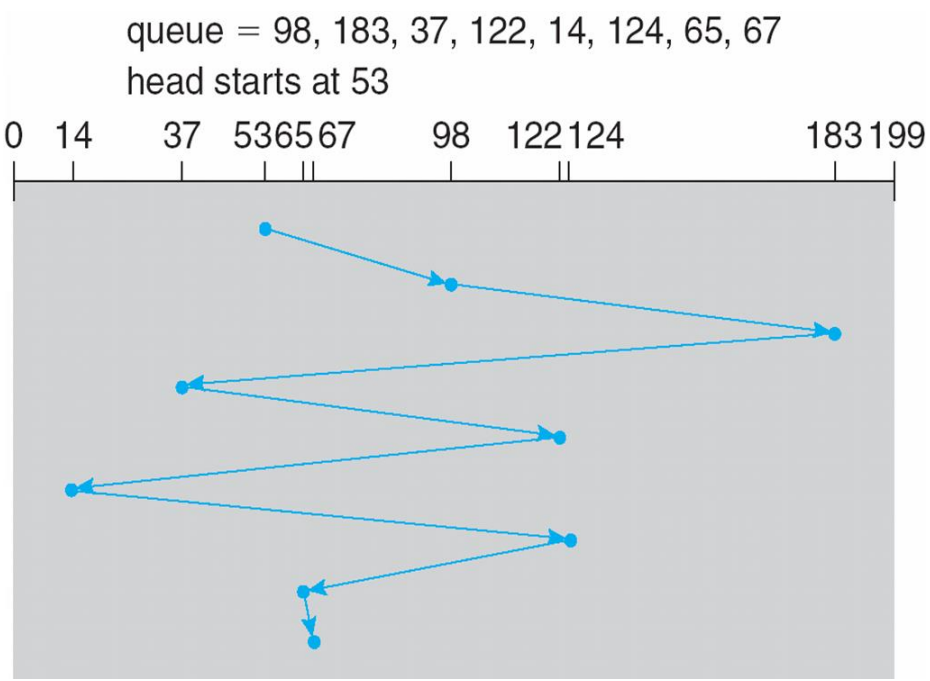

SSTF

- Shortest Seek Time First
  - Minimizes arm movement (seek time)
  - Unfairly favors middle blocks
  - May cause starvation
  - Nearest-Block-First (NBF) when the drive geometry is not available to the host OS

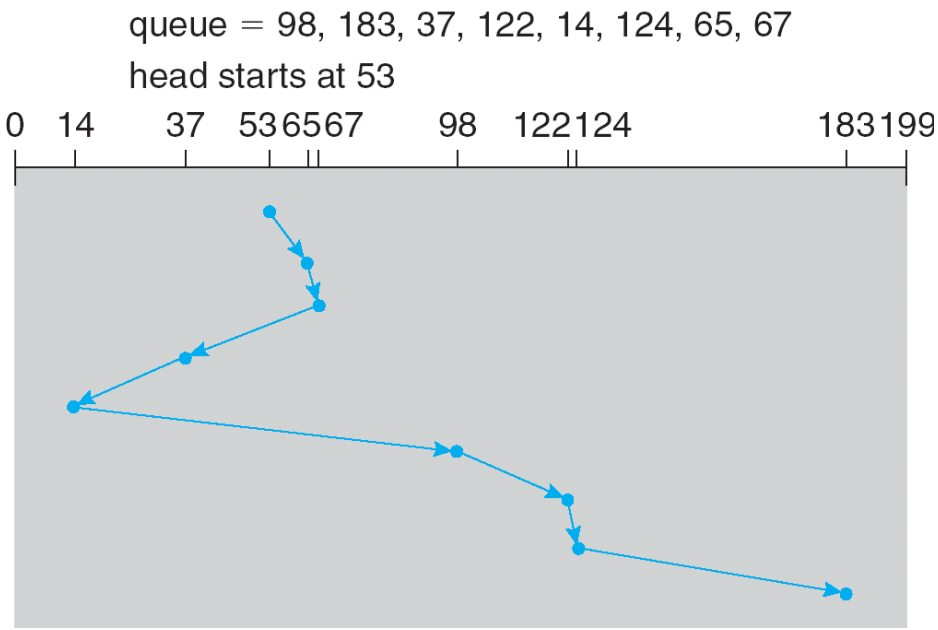

SCAN

- SCAN
  - Service requests in one direction until done, then reverse
  - Skews wait times non-uniformly
  - Favors middle blocks

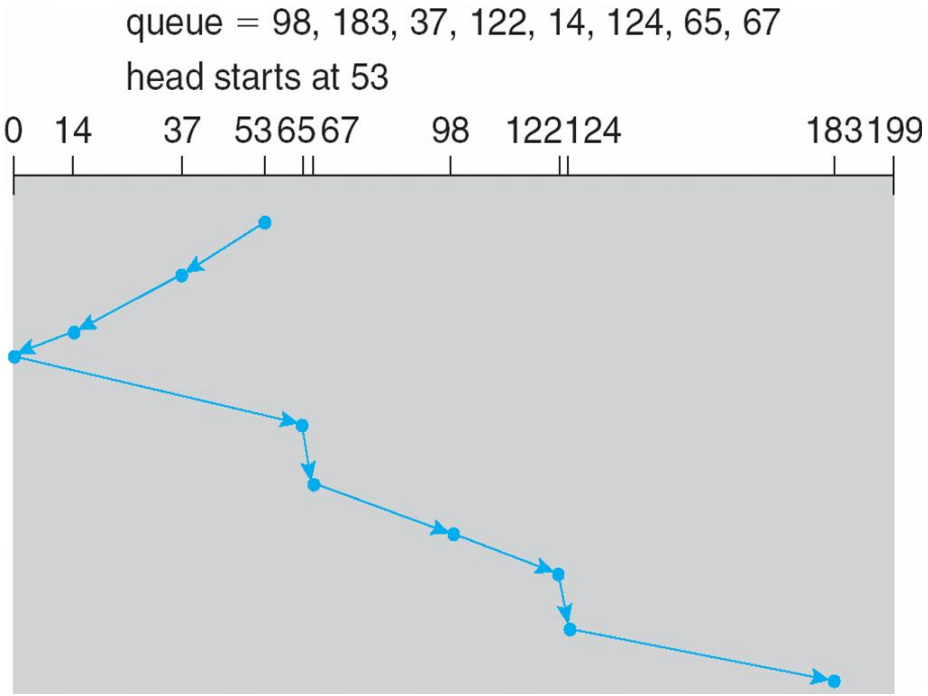

- F-SCAN
  - Freezes the queue when it is doing a sweep
  - Avoids starvation of far-away requests

C-SCAN

- Circular SCAN
  - Like SCAN, but only goes in one direction (e.g. typewriter)
  - Uniform wait times

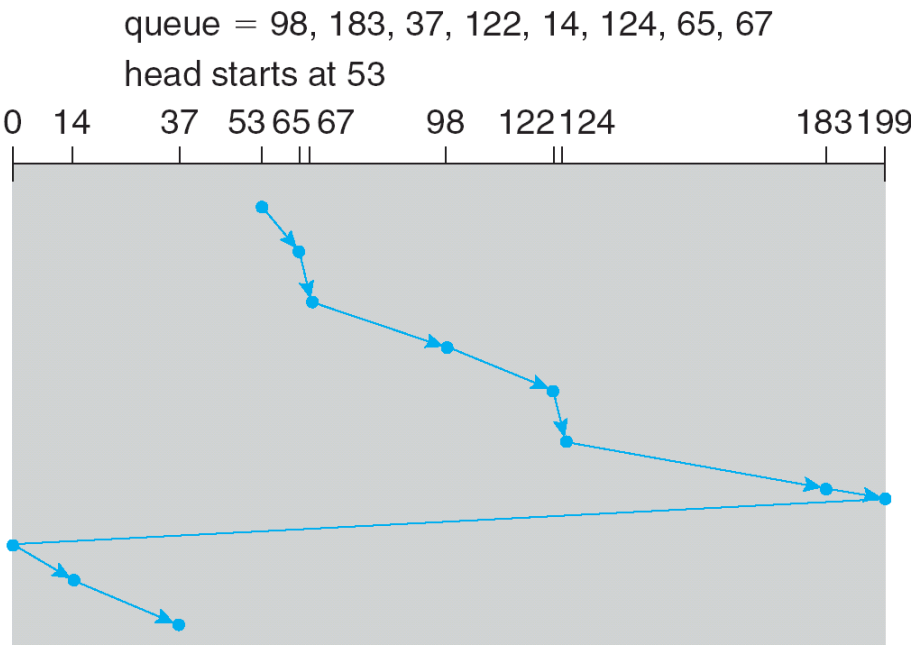

- SCAN and C-SCAN are referred to as the "elevator" algorithm
  - Both do not consider rotation

Modern Disk Scheduling

- I/O scheduler in the host OS
  - Improve overall disk throughput
    - Merge requests to reduce the number of requests
    - Sort requests to reduce disk seek time
  - Prevent starvation
  - Provide fairness among different processes
- Disk drive
  - Disk has multiple outstanding requests
    - e.g. SATA NCQ (Native Command Queueing): up to 32 requests
  - Disk schedules requests using its knowledge of head position and track layout
    - e.g. SPTF (Shortest Positioning Time First): consider rotation as well